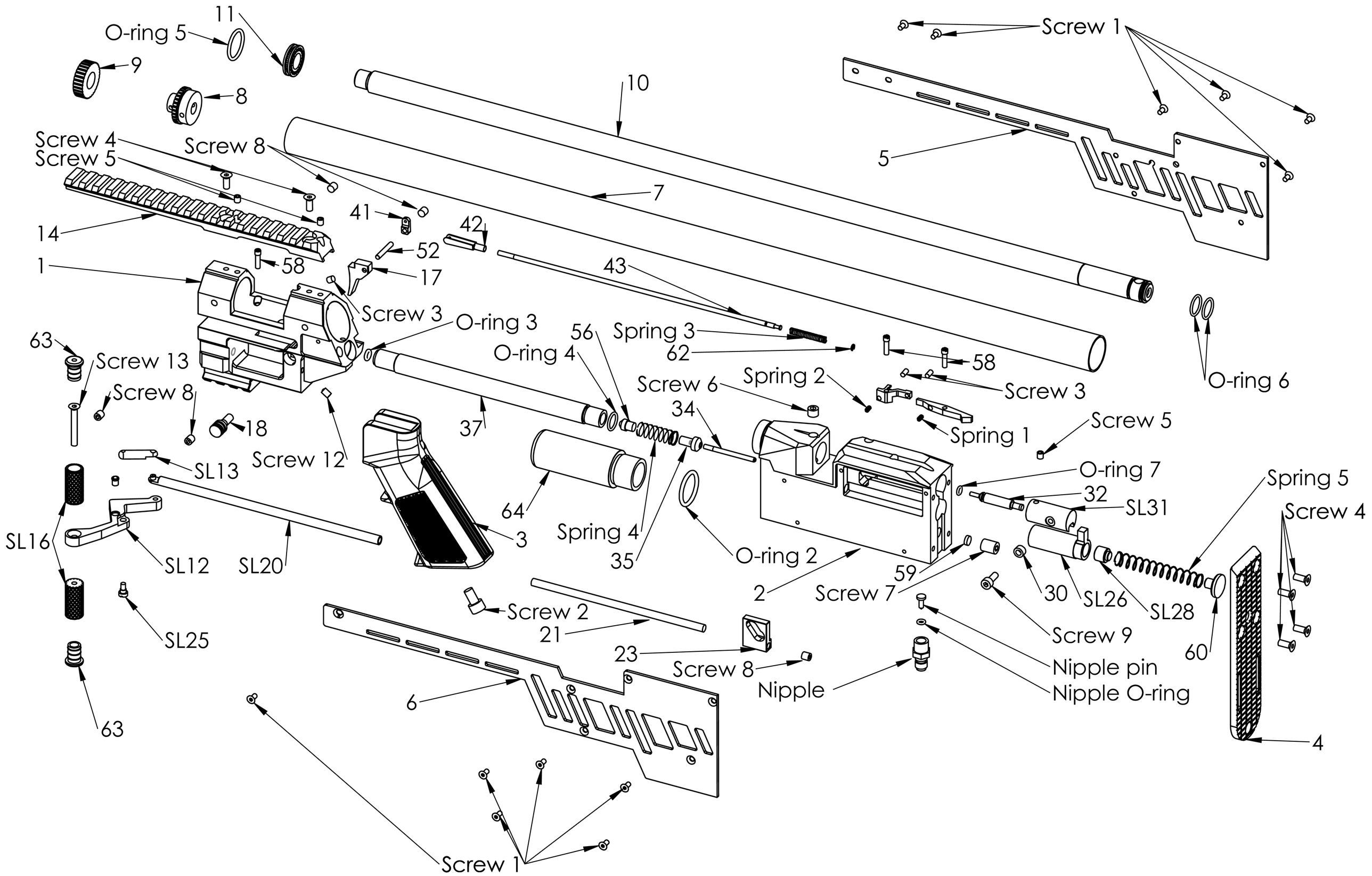
11
O-ring 5
9
8
Screw 1
10
Screw 4
Screw 5
Screw 8
5
7
41
42
14
52
58
1
17
43
Screw 3
O-ring 3
63
56
Spring 3
O-ring 4
62
58
Screw 13
Spring 2
Screw 6
Screw 3
O-ring 6
Screw 8
34
18
37
Spring 1
Screw 5
SL13
Screw 12
O-ring 7
Spring 5
32
SL31
Screw 4
64
SL16
3
Spring 4
35
O-ring 2
SL12
SL20
59
2
Screw 7
30
SL26
SL28
Screw 2
21
SL25
Screw 9
23
Screw 8
Nipple pin
60
Nipple
Nipple O-ring
6
63
4
Screw 1